# OMID USA AI Enabled Agricultural Monitoring System

University of CINCINNATI

omid

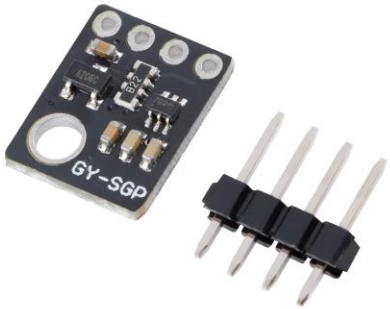

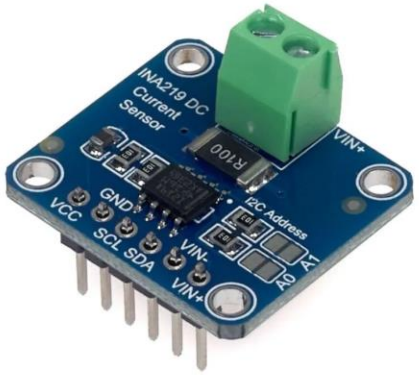


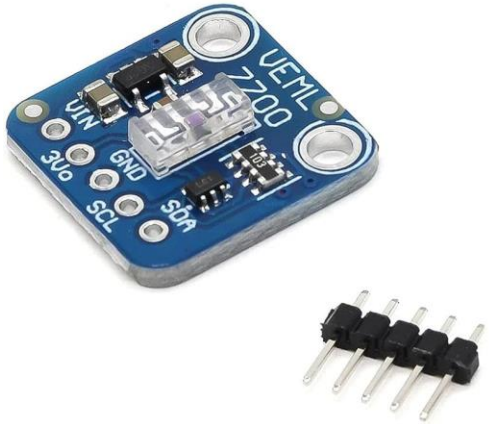

University of CINCINNATI

University of CINCINNATI

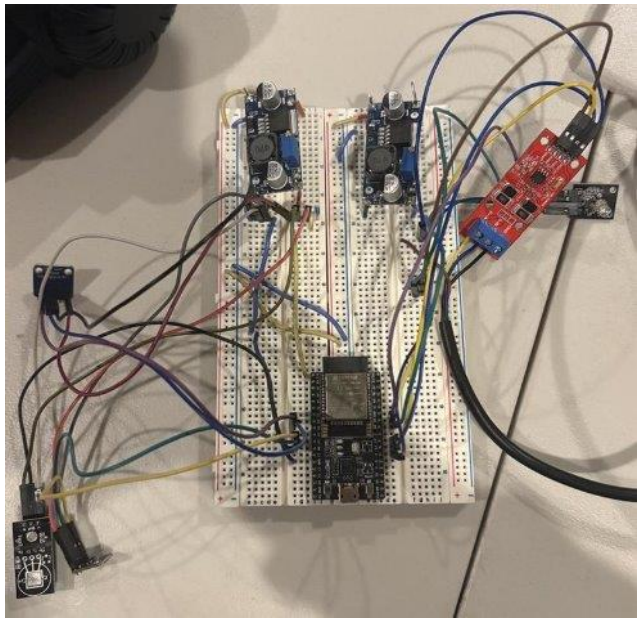

Breadboard Design

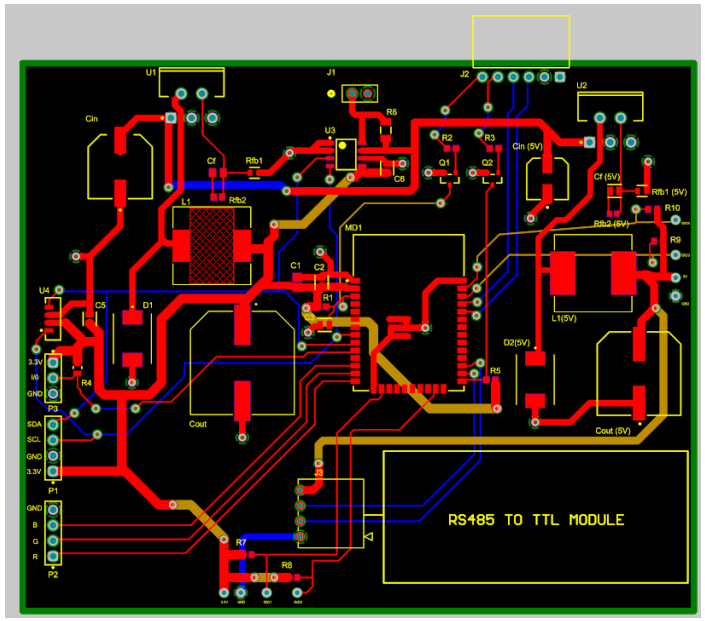


PCB Design

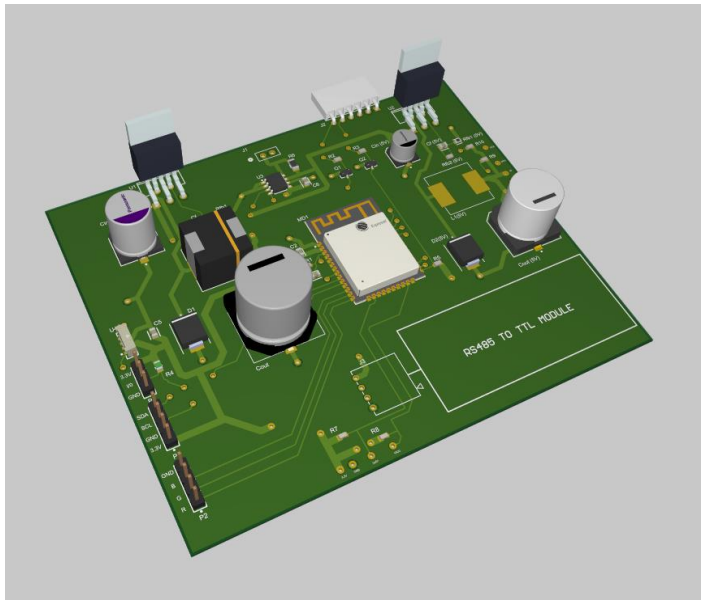


PCB 3D Design

University of CINCINNATI

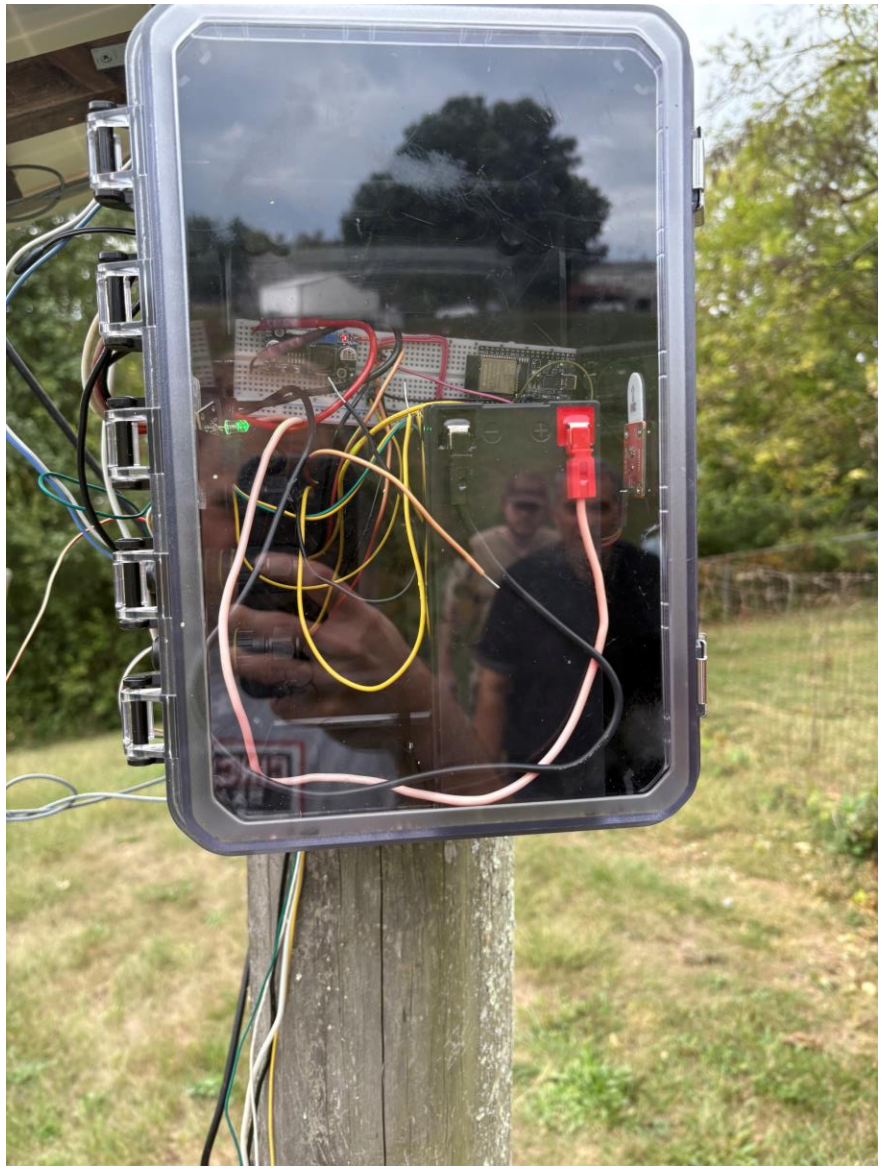

New Box

University of CINCINNATI

Holybro

University of CINCINNATI

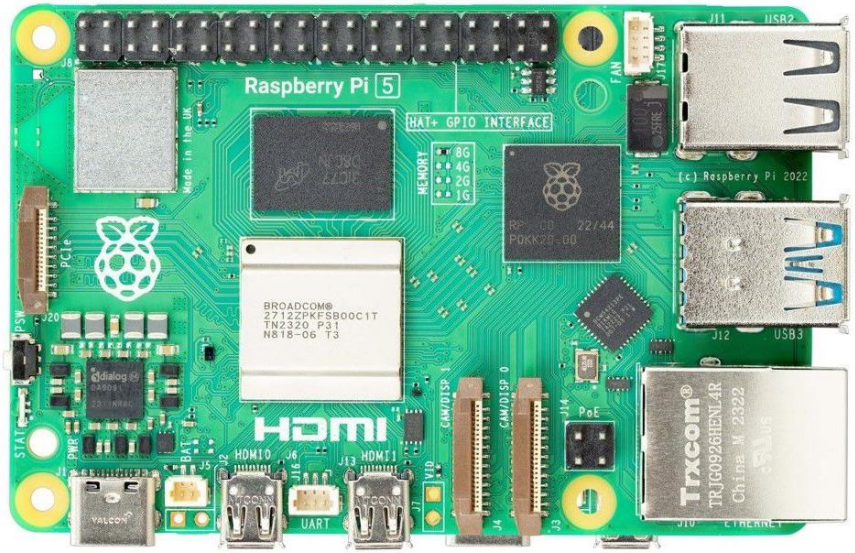

University of CINCINNATI

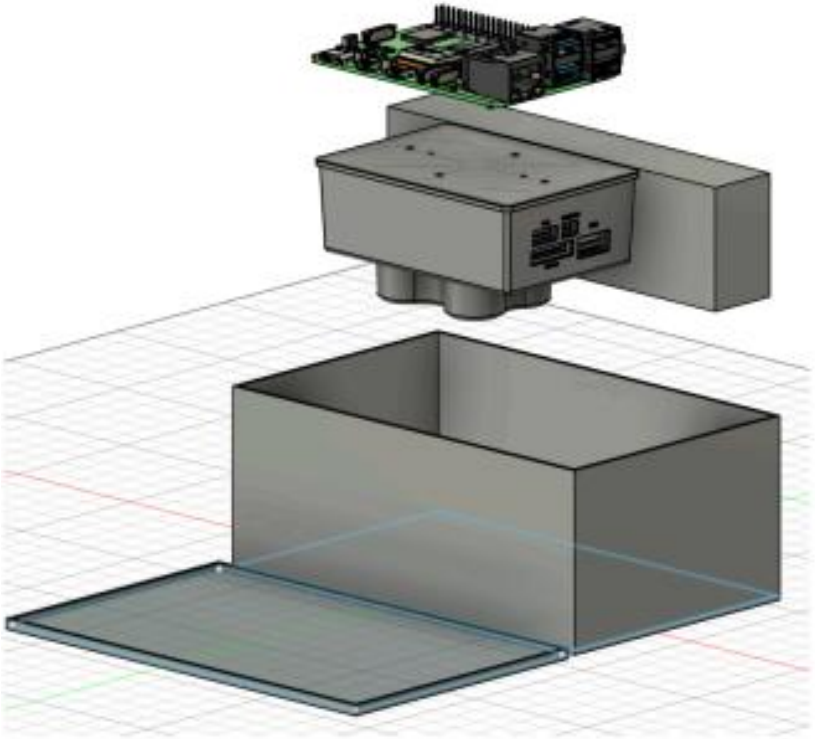

New Camera Holder

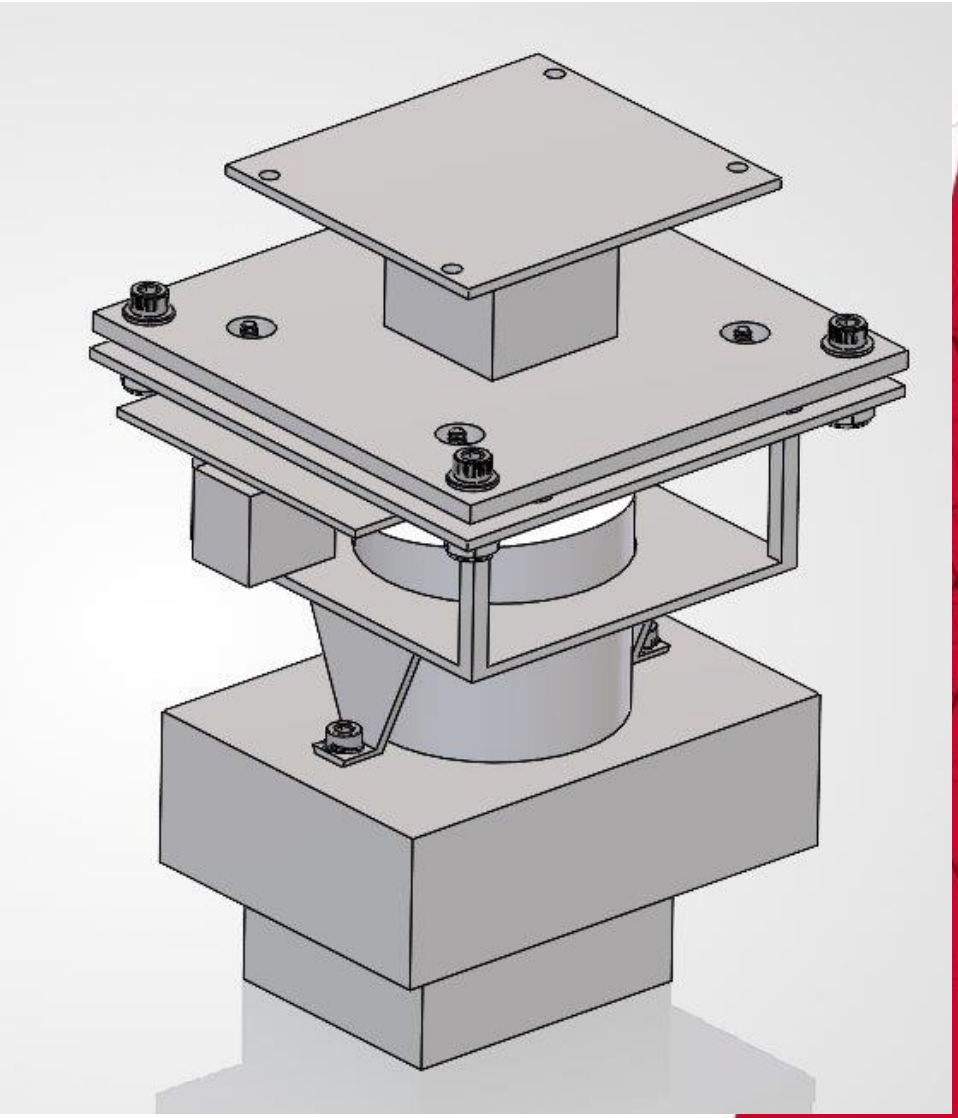

University of CINCINNATI

New Camera Holder

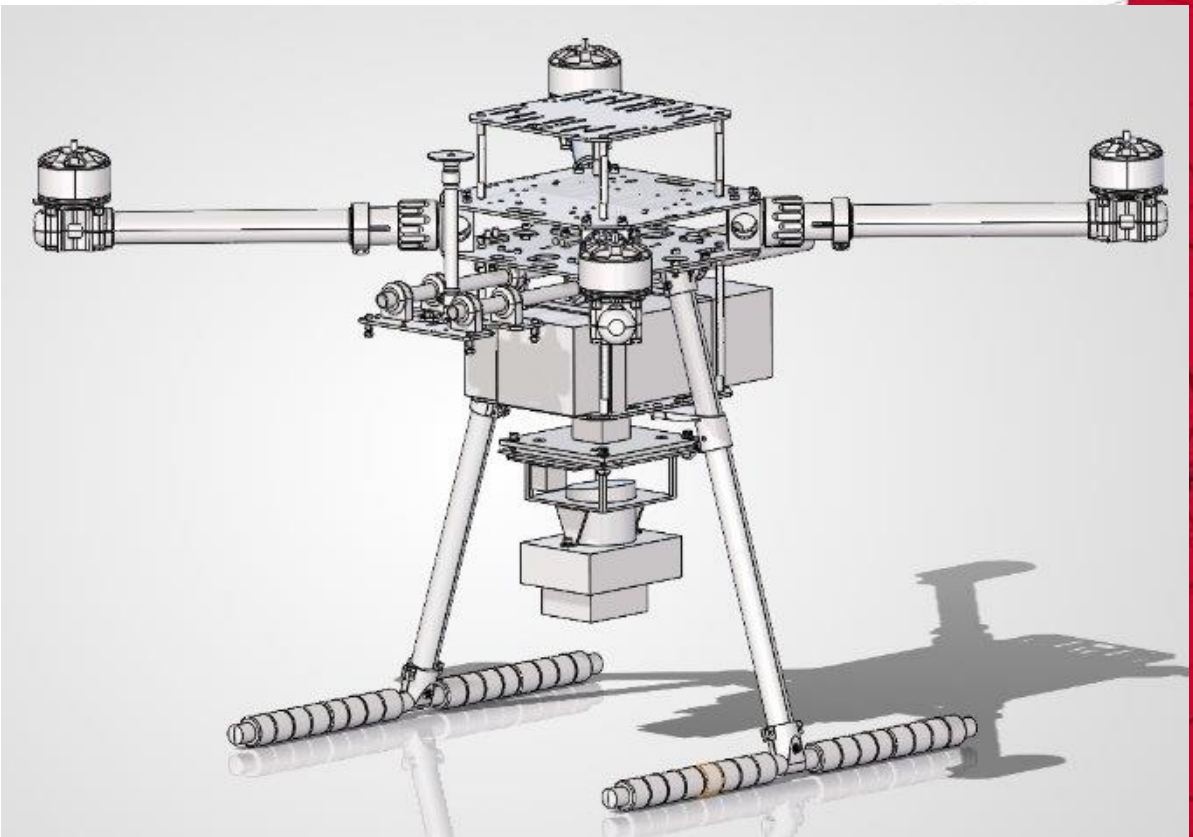

University of CINCINNATI

University of CINCINNATI

# Data Model
## *High-Level*

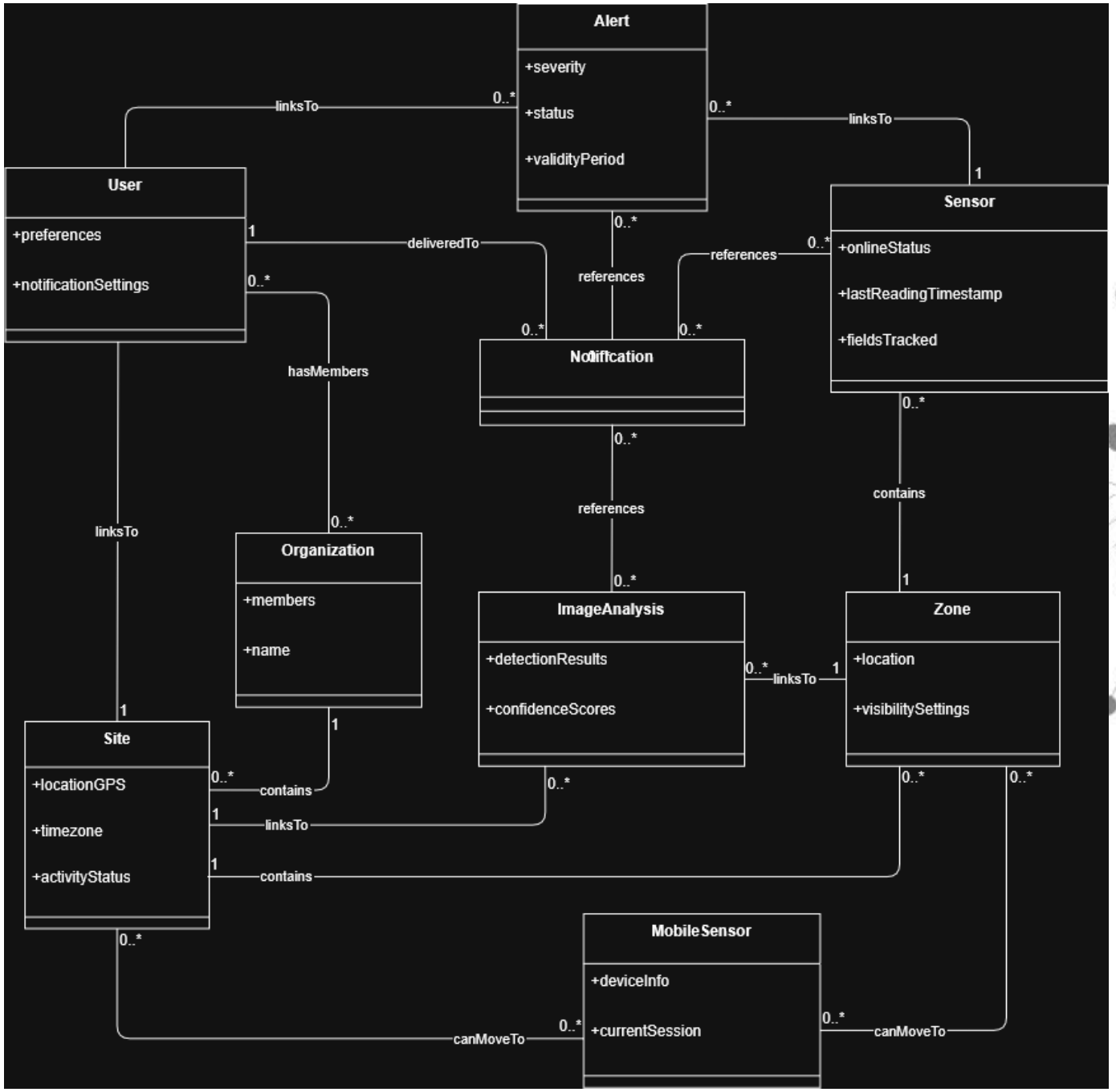


University of CINCINNATI

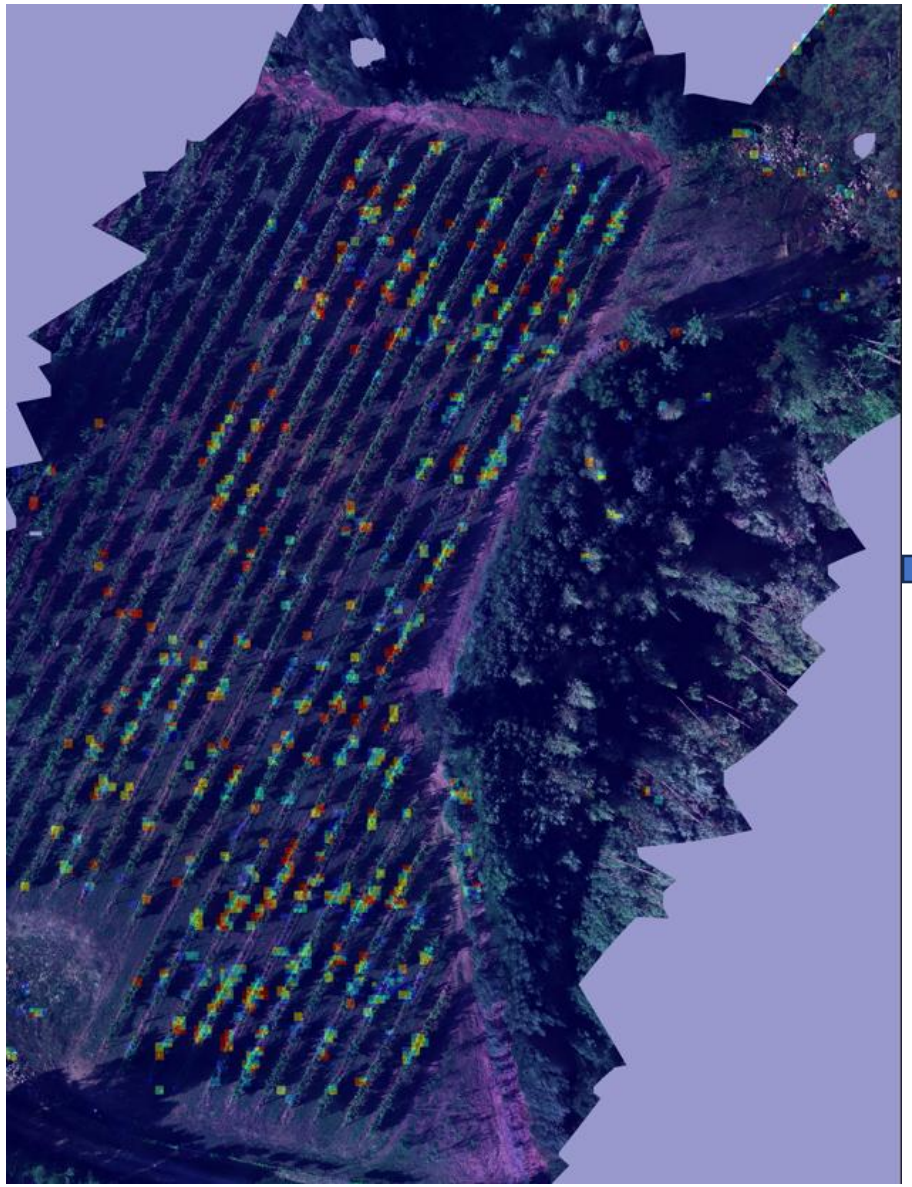

More Training Data

Better vine coverage
+
Better Precision
(Less FPs)

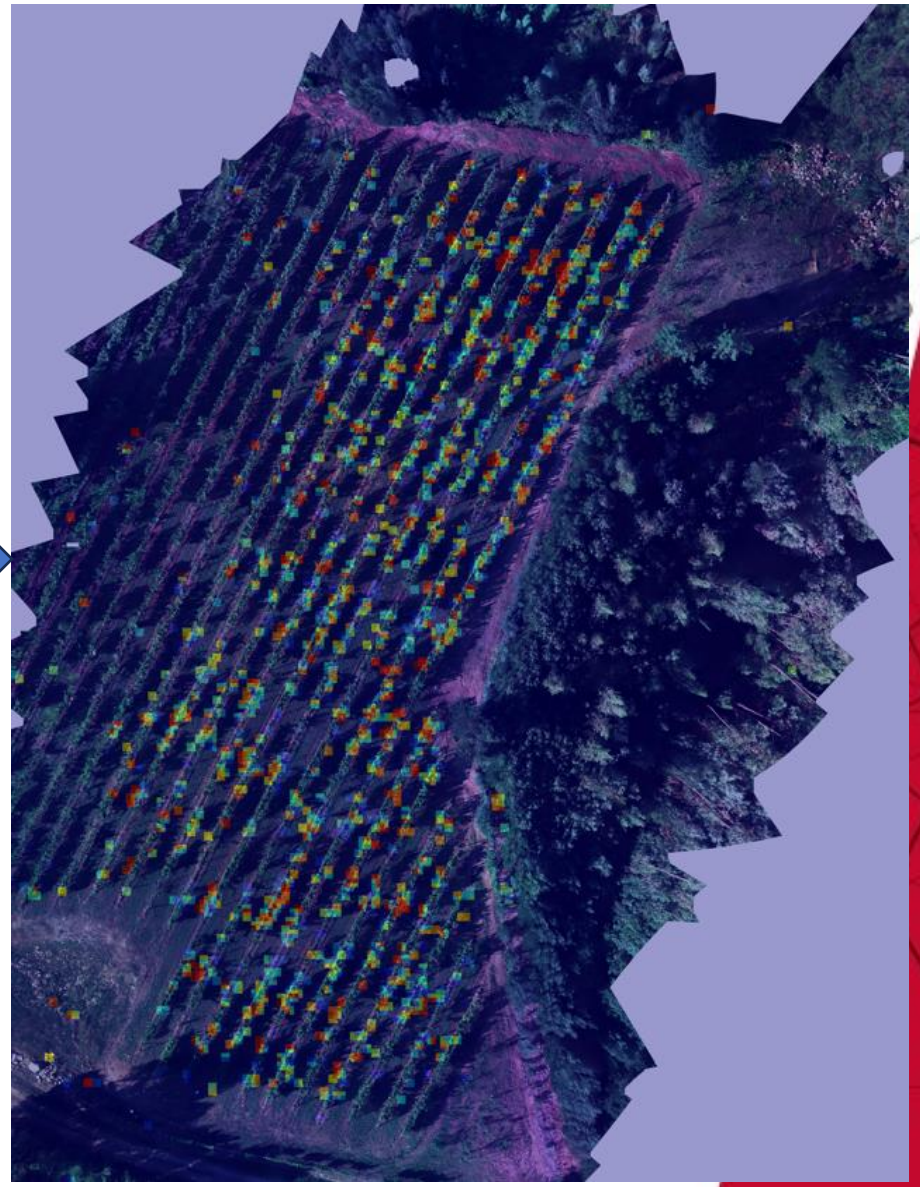

University of CINCINNATI

**Highlight Disease Markers**

**Reduce Background Noise**

University of CINCINNATI

## Pest Detection Model Training

Image sent to model
For training

Random Image Augmentation

Model will recognize the patterns for the Images with Japanese Beetle for the future.

## Pest Detection Model Training

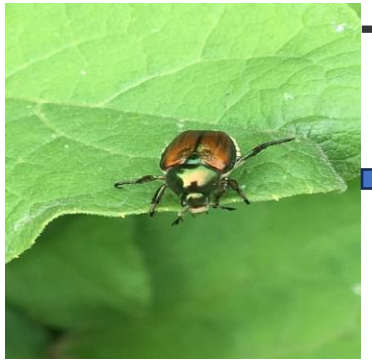

Trained Model Evaluates

Returns

"Japanese Beetle"

```
Train Loss: 0.0327
              precision    recall  f1-score   support

           0     0.8636    0.9500    0.9048        20
           1     0.9091    0.9524    0.9302        21
           2     0.9091    1.0000    0.9524        20
           3     1.0000    1.0000    1.0000        20
           4     1.0000    0.9500    0.9744        20
           5     1.0000    0.7895    0.8824        19

    accuracy                         0.9417       120
   macro avg     0.9470    0.9403    0.9407       120
weighted avg     0.9462    0.9417    0.9411       120

✅ New best model saved! F1 = 0.9407
```

University of CINCINNATI | MECHANICAL AND MATERIALS ENGINEERING

# Application Demo

AGRIVOLTAICS | FARM INTELLIGENCE PLATFORM